HO Structure Kit
STORAGE SHED ON PILINGS
933-3529

Thanks for purchasing this Cornerstone Series Kit. Please read all instructions before starting. All parts are molded in styrene plastic. Use glues and paints which are compatible.

1. Start by gluing the Legs (20) to the Base (19).
2. Glue Window Glass (30) to End Walls (21)
Glue the End Walls (21) and Side Walls (22) to the Base.
5. Now glue two Roof Halves (25) together. Glue roof to top of assembly.
6 Finally, glue Roof Vent Cap (27) to Roof Vent Base (26). Glue to Roof.

Sign Placement

Printed signs for this building are provided. Cut them out carefully; attach to the front with white glue.

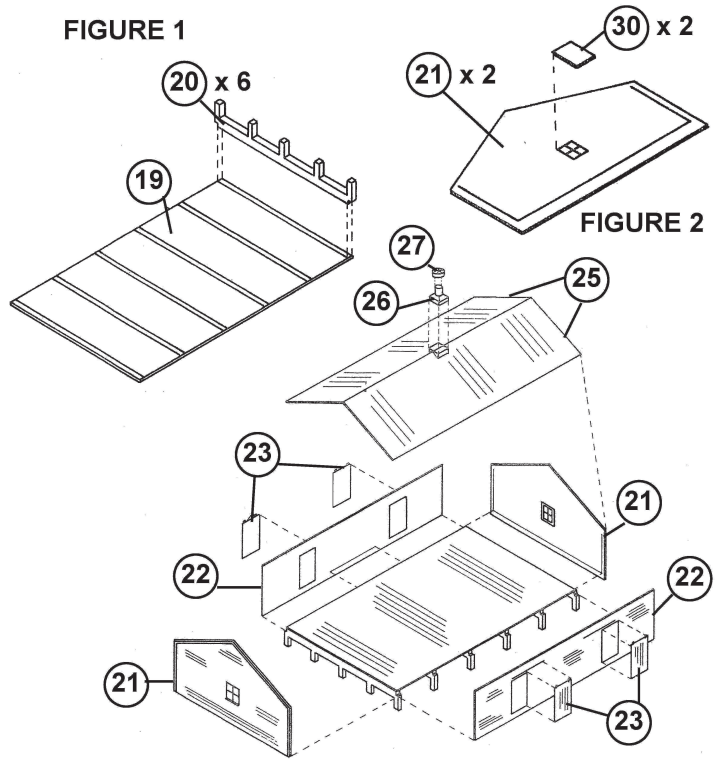

© 2011 Wm. K. Walthers, Inc., Milwaukee, WI 53218 waltherscornerstone.com I-3529